COPYRIGHT ALL RIGHTS RESERVED

DO NOT SCALE

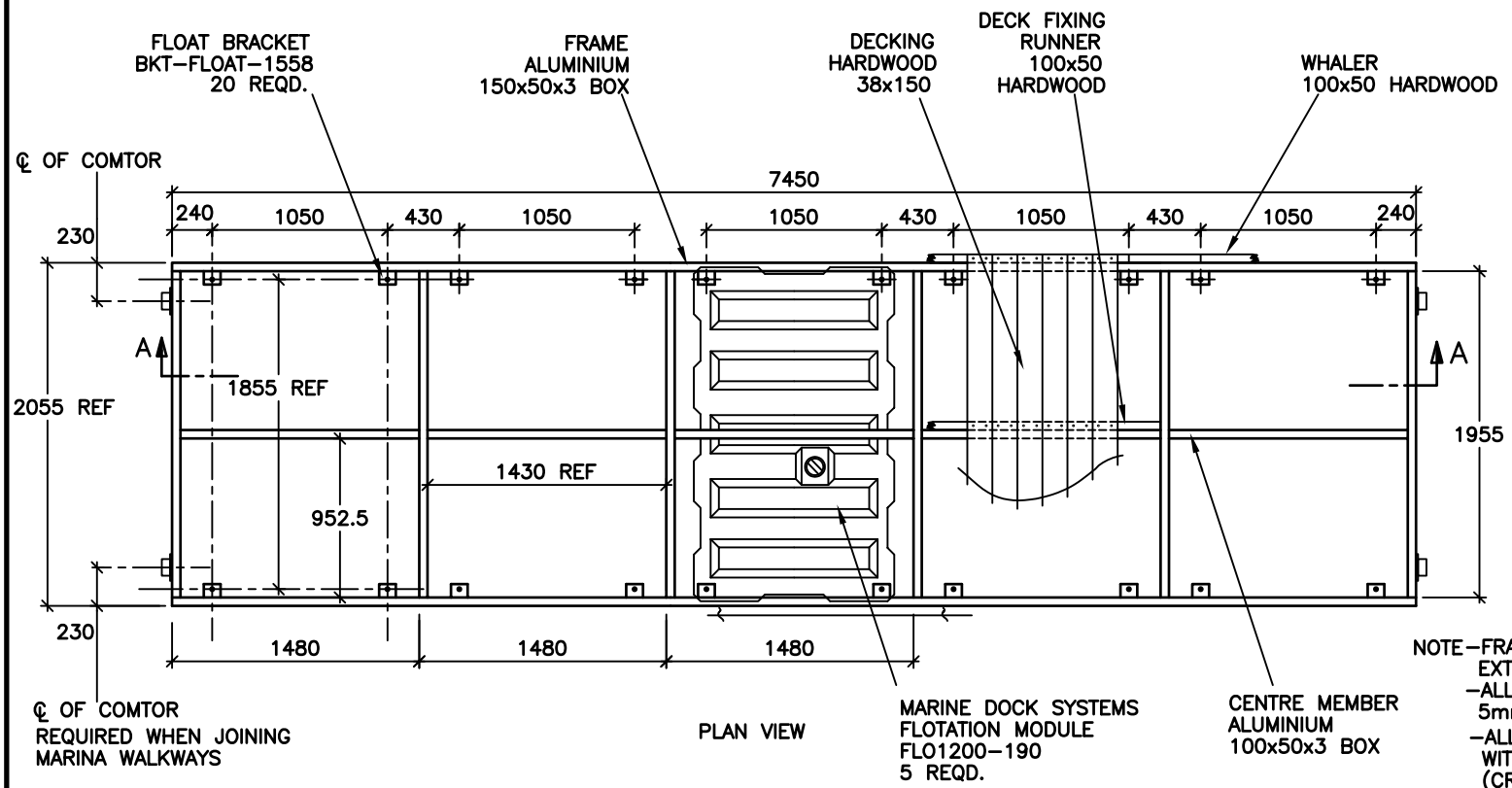

FOR ADDITIONAL ASSEMBLY DETAILS, REFER TO THE FOLLOWING DRAWINGS.

FLOAT AND DECK– A4–1503
COMTOR– A4–1502

FASTENERS REQUIRED.

PART No.	ITEM	QTY. REQD.
737	3/8" BOLTx3 1/2"	20
370	3/8" BOLTx4"	42
372	1" WASHER	72
296	1 1/2" WASHER	40
371	3/8" NYLOC NUT	62
729	DECK SCREW	316
731	BUFFER SCREW	–
367	CLEAT SCREW	–
368	5/8" WASHER	–
369	5/16" NYLOC NUT	–

NOTE–FRAME IS FULLY WELDED ALUMINIUM EXTRUSION OF GRADE 6063–T5.
–ALL WELDS ARE A NOMINAL FILLET OF 5mm. FILLER IS GRADE 5356.
–ALL TIMBER IS TO BE TREATED WITH A SUITABLE PRESERVATIVE. (CREOSOTE, DECKING PAINT, ETC)
–ALL FASTENERS ARE CORROSION RESISTANT STAINLESS STEEL.
–ALL EXPOSED BOLTS ARE TO BE RECESSED INTO THE TIMBER BY COUNTER BORING.
–ALL BOLT THREADS ARE TO BE TREATED WITH ANTI–SIEZE OR EQUIVALENT LUBRICATING COMPOUND PRIOR TO FASTENING.
–THIS DRAWING IS FOR A PONTOON OF TYPICAL DESIGN. ENGINEERING EVALUATION SHOULD BE PERFORMED FOR THE PONTOONS SUITABILITY FOR EACH PARTICULAR INSTALLATION.

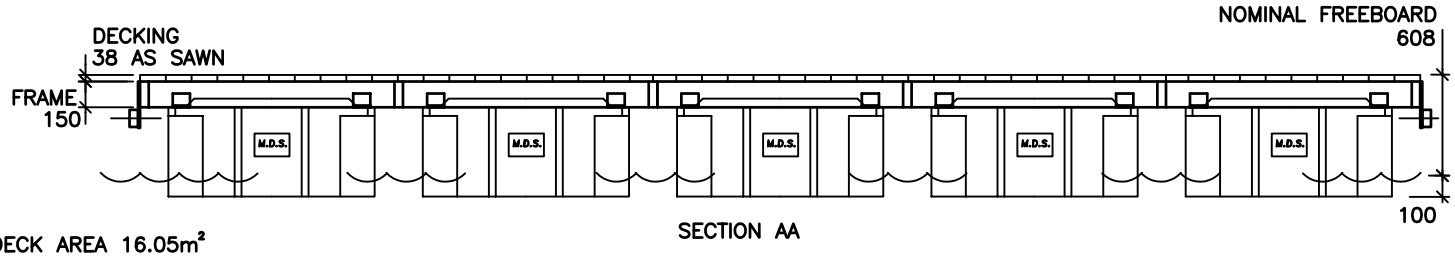

SECTION AA

DECK AREA 16.05m²
APPROX. WEIGHT 1155kg

MARINE DOCK SYSTEMS PTY LTD	7.5mx2.1m WALKWAY 5x 1200L FLOATS	PONTOON –1600 WALKWAY SECTION	MARINE DOCK SYSTEMS AUSTRALIA	SCALE N.T.S.	DRAWING No.
				DRAWN BJM	**A4–1600**
				DATE 3,7,98	REV A